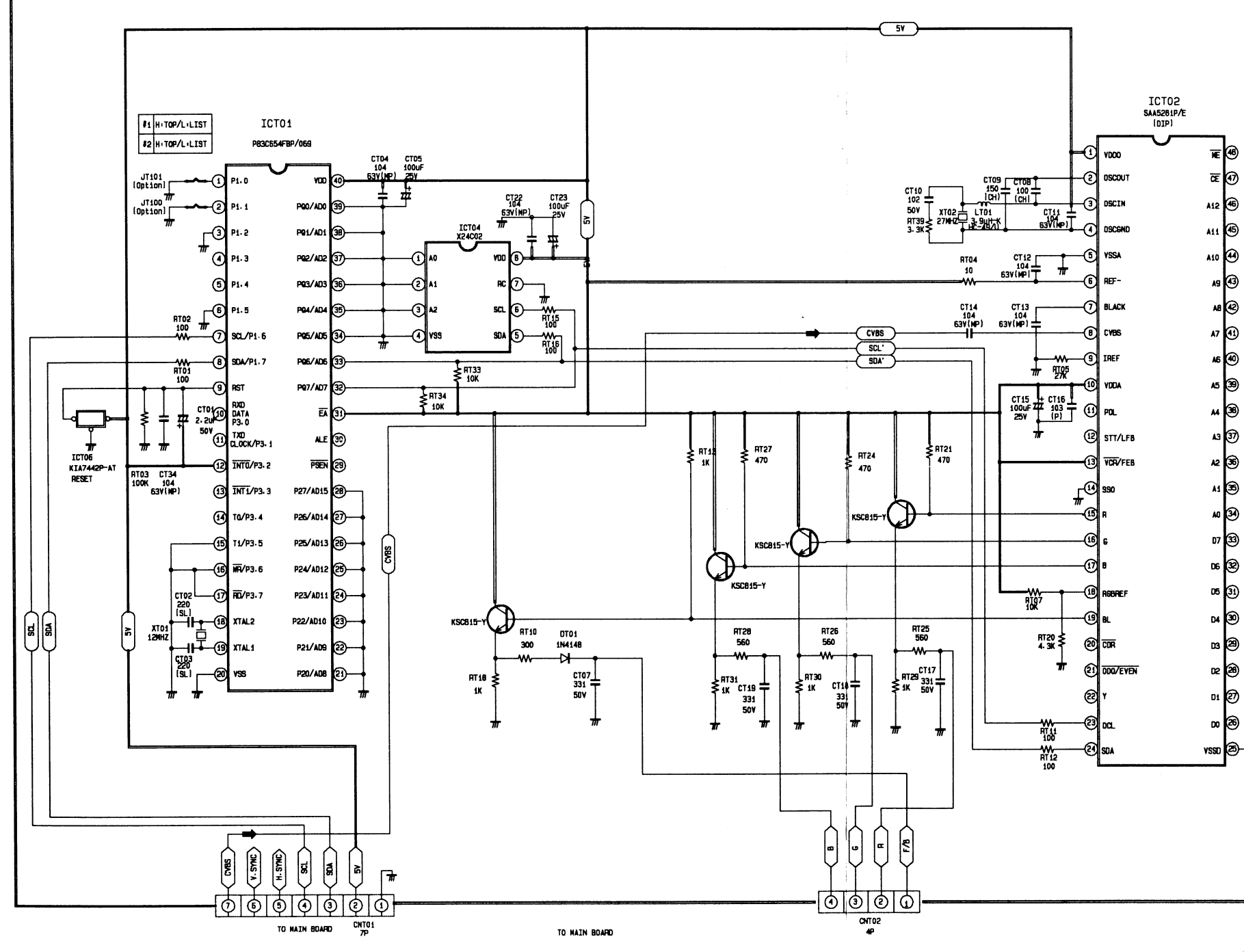
#1 H:TOP/L:LIST
#2 H:TOP/L:LIST
ICT01
P83C654FBP/069
ICT02
SAA5281P/E
(DIP)
ICT04
X24C02
ICT06
KIA7442P-AT
RESET
JT101
(Option)
JT100
(Option)
XT01
12MHZ
XT02
27MHZ
LT01
3.9uH-K
CT04
104
63V(NP)
CT05
100uF
25V
CT22
104
63V(NP)
CT23
100uF
25V
CT01
2.2uF
50V
CT02
220
(SL)
CT03
220
(SL)
CT34
104
63V(NP)
CT10
102
50V
CT09
150
(CH)
CT08
100
(CH)
CT11
104
63V(NP)
CT12
104
63V(NP)
CT13
104
63V(NP)
CT14
104
63V(NP)
CT15
100uF
25V
CT16
103
(P)
CT17
331
50V
CT18
331
50V
CT19
331
50V
CT07
331
50V
RT01
100
RT02
100
RT03
100K
RT04
10
RT05
27K
RT07
10K
RT10
300
RT11
100
RT12
100
RT15
100
RT16
100
RT18
1K
RT19
1K
RT20
4.3K
RT21
470
RT24
470
RT25
560
RT26
560
RT27
470
RT28
560
RT29
1K
RT30
1K
RT31
1K
RT33
10K
RT34
10K
RT39
3.3K
DT01
1N4148
KSC815-Y
KSC815-Y
KSC815-Y
KSC815-Y
5V
SCL
SDA
CVBS
SCL'
SDA'
CVBS
V.SYNC
H.SYNC
SCL
SDA
5V
B
G
R
F/B
TO MAIN BOARD
CNT01
7P
TO MAIN BOARD
CNT02
4P